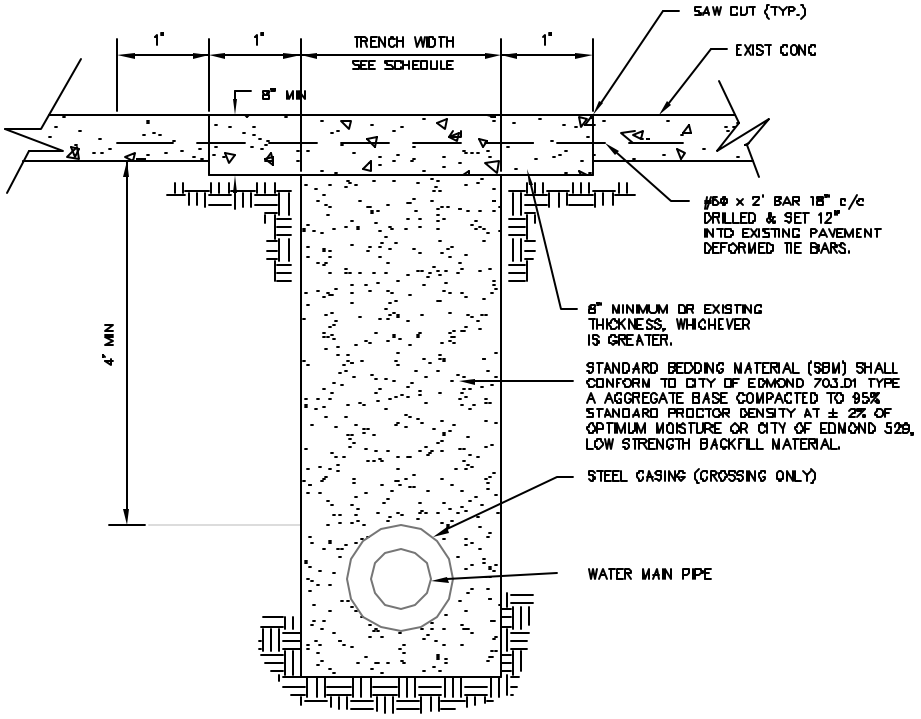

INSIDE PIPE DIAMETER (IN.)	STANDARD TRENCH WIDTH (IN.)
6	18
8	24
10	30
12	30
15	36
18	36
21	42
24	42
27	48
30	48
36	54
42	60
48	66

CONCRETE

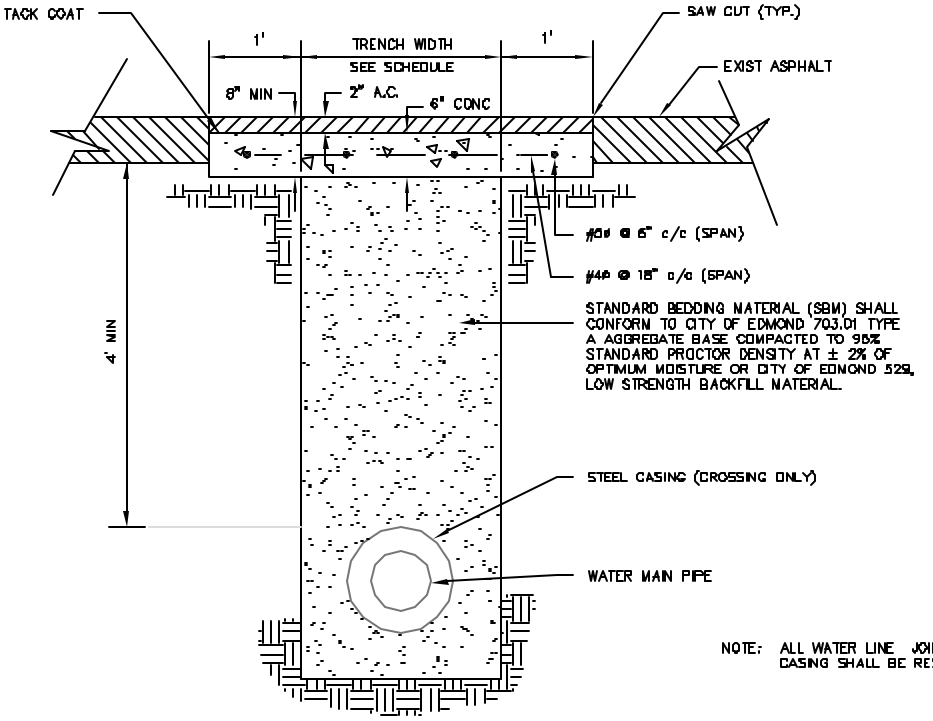

NOTE: ALL WATER LINE JOINTS WITHIN CASING SHALL BE RESTRAINED.

ASPHALT

REVISIONS	NO.	DATE	ITEM CHANGED
	1	7/26/2004	JOINT RESTRAINT

CITY OF EDMOND

ENGINEERING DEPARTMENT
CONSTRUCTION STANDARDS

PAVING CUTS PERMANENT & REPAIRS

WATER

SPECIFICATION NO. 616

WL-11 PAGE 11

D:\ENG\MASTER FORMS\STANDARD CONSTRUCTION DRAWINGS\EDMOND\STANDARD CONSTRUCTION DRAWINGS (JULY 2004)\NEW & REVISED\WL-11R01.DWG
JULY 26, 2004 REEBER